Dylan Thornburg

Santa Clara University	ELEN 164	Dr. Shoba Krishnan
Laboratory #3: Understanding Power Factor		

I. Objectives

- To study instantaneous and average power delivered to various loads.
- To study power factor and distortion.

II. Laboratory Procedure:

We studied the response of passive loads to sinusoidal inputs in the last lab. In this lab we will continue our study of power but also further understand power factor and its correction.

The circuit in Figure 1 is the load we plan to simulate and understand power

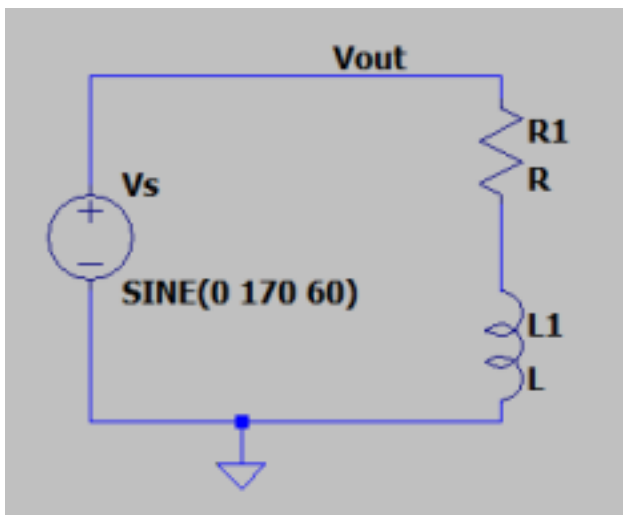

Figure 1: Resistive- Inductive Load

Part 1: Sinusoidal input to RL loads

Section 1: Power analysis

In this section we will analyzing the power in an RL load when a sinusoidal source is applied to it.

Simulations:

(1) Make the voltage source Vs a sinusoidal source with 170V amplitude and 60Hz frequency.
(2) Pick R1 = 10ohms and L1= 20 mH
(3) Setup a Transient Analysis for 300ms, using 1us time step. But display the data after 150ms when the system has reached steady state. The statement that helps do this is

.tran 1us 300ms 150ms

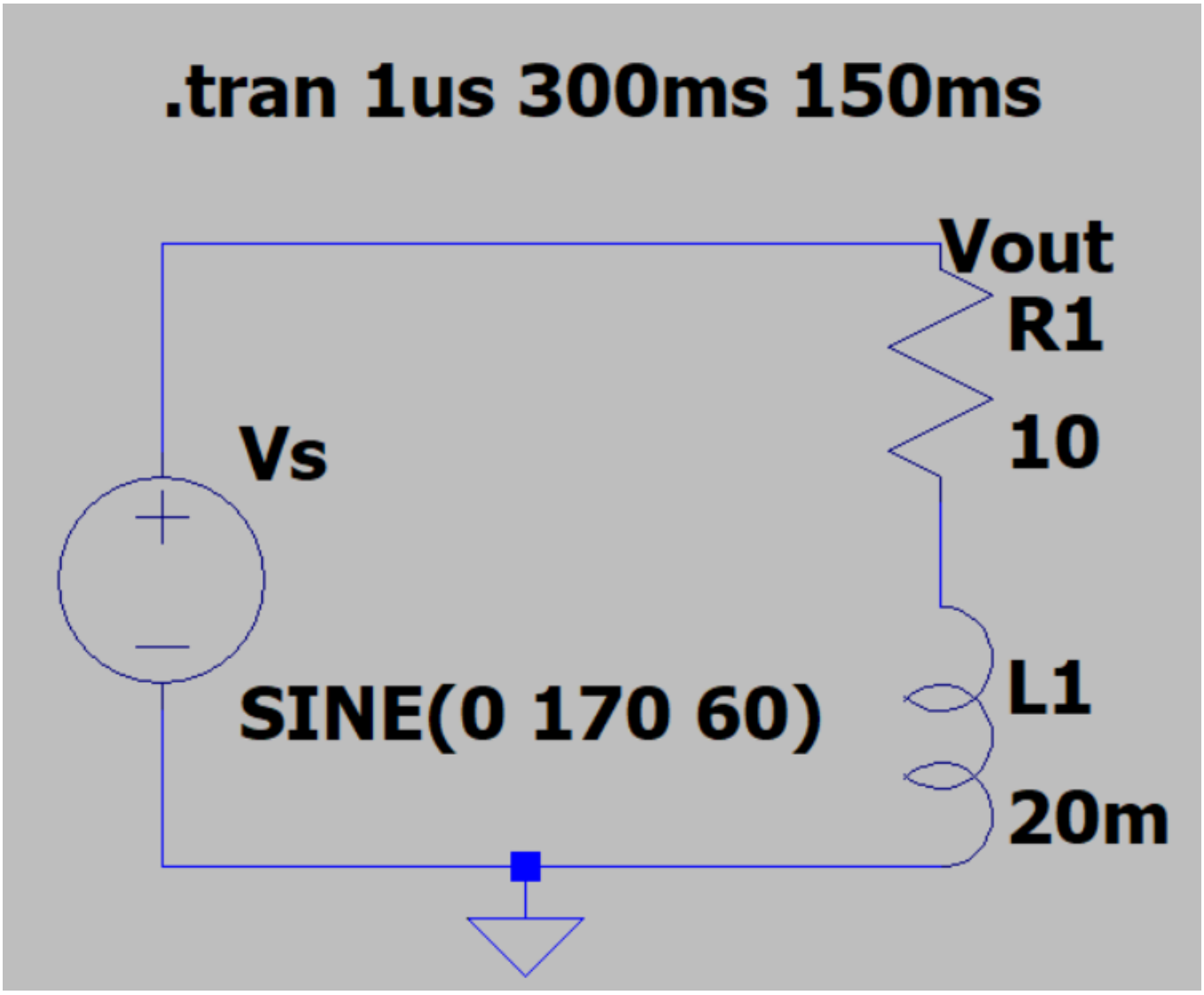

(4) You will be measuring several quantities as listed below

a. Using measure statements, find the average power.

.meas P AVG V(Vout)*I(R1)

b. Now set up some measure statements so that we can calculate the power factor.

Get the rms values of source voltage and source current

.meas Vrms RMS V(Vout)

.meas Irms RMS I(Vs)

c. Find the apparent power S using below statement

.meas S param Vrms*Irms

d. Find power factor from P and S. Use a measure statement again.

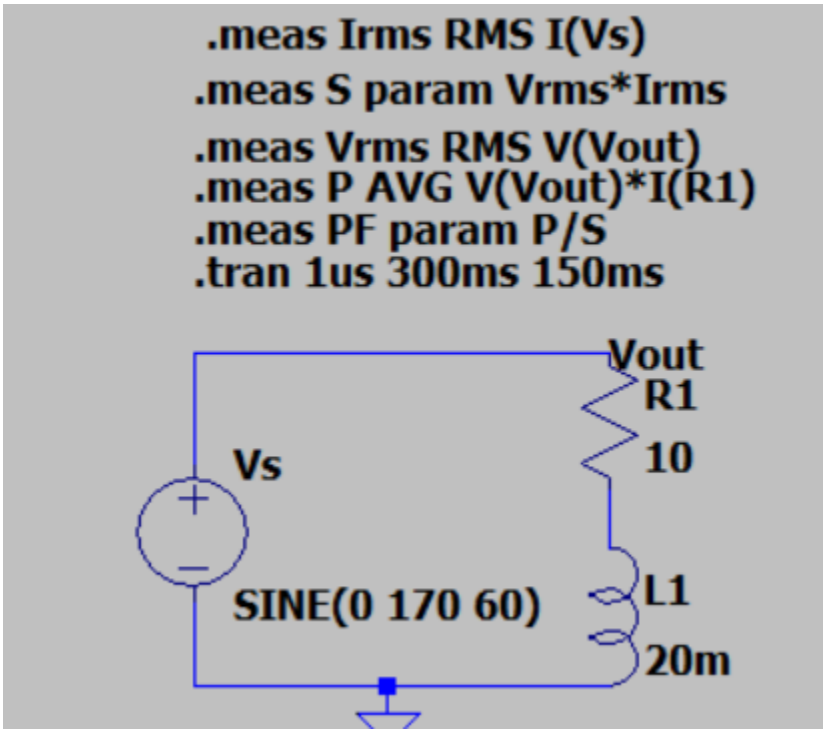

(5) Run the simulation.

Observations and Calculations:

In this section you will be analyze the power

(1) Plot voltage across the load (Vout) and current through the load.

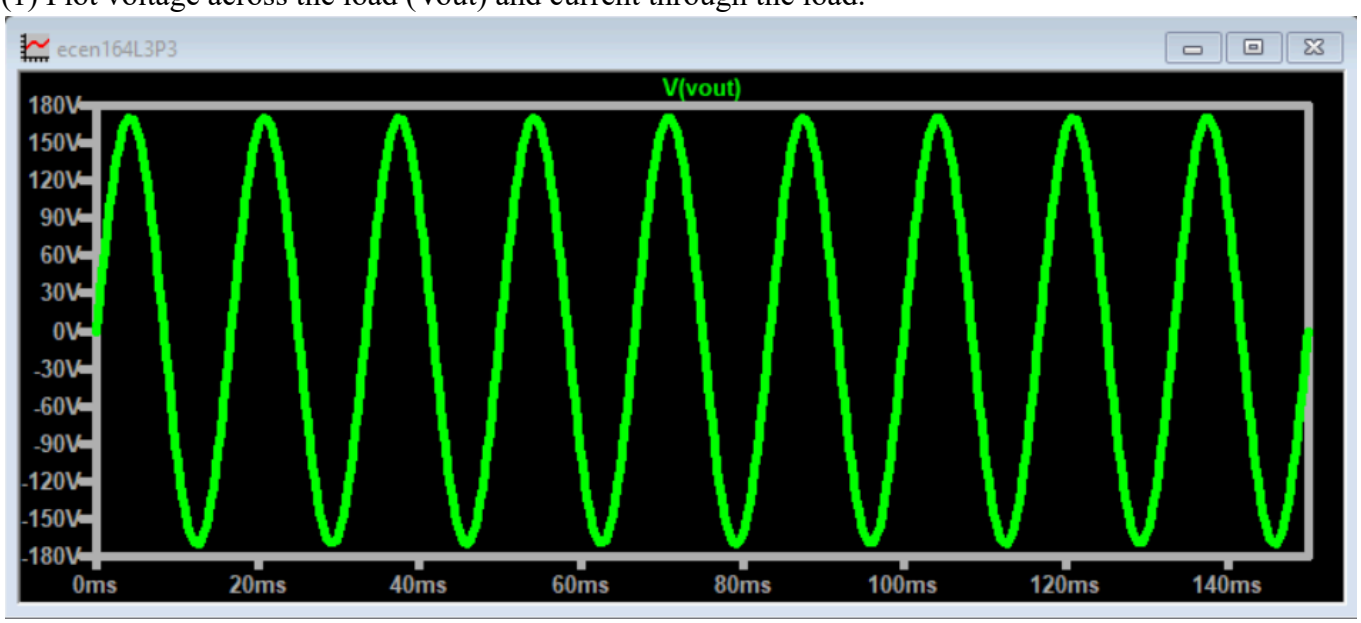

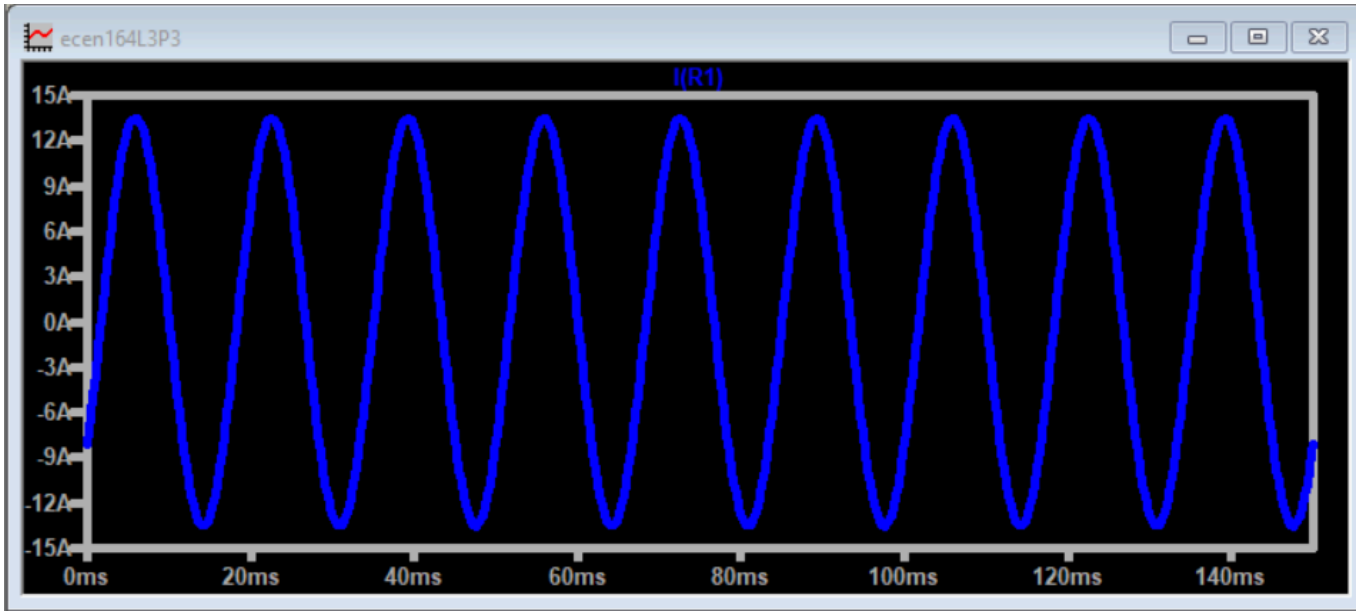

(2) From the plots find the phase difference between the voltage and current.

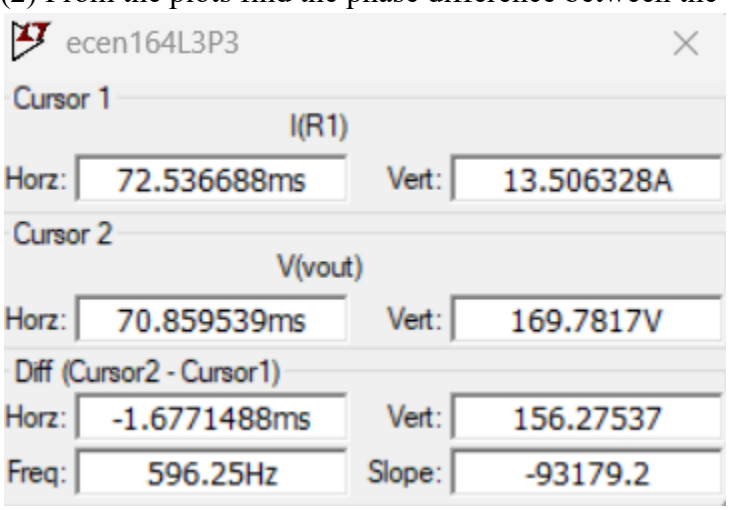

Phase diff is 1.677ms

(3) From the phase difference noted from the plots, find the phase difference in degrees. Remember what you have measured is time, convert this to radians and then degrees.
2*pi*f *change in time = phase diff in radians
2*pi*60*1.677ms = .632 rad = 36.226 degrees
(4) Using the phase in degrees find the power factor.
PF = cos(36.226) = .807
(5) Results of all the measure statements are in the log file. To access the log file: select schematic window and press CTRL-L. The log file will pop open in a new window.
(6) Compare the power factor from the plots to those form the measure statements. Comment on your result.

```
p: AVG(v(vout)*i(r1))=915.93 FROM 0 TO 0.15
vrms: RMS(v(vout))=120.087 FROM 0 TO 0.15
s: vrms*irms=1147.48
pf: p/s=0.798208
irms: RMS(i(vs))=9.55544 FROM 0 TO 0.15
```

The power factor is slightly lower in the measurement log, but still very close. Probably a rounding/time measurement difference.

(7) What do you notice about the power factor for this load?
It is not 1 or 0 as expected by the mixed real and non-real load. The resistor is still dominant as we are closer to 1.

Section 2: Distortion and frequency content of output

In this section we will analyzing the output for its frequency content.

Simulations:

(1) Enter the *.op* commands **.OPTIONS plotwinsize=0** and **.OPTIONS numdgt=7** to give your simulation more resolution. These commands stop lossy data compression and enable double precision data, respectively, and allow your results to be much more precise.

(2) To get a log file showing the harmonic distortions via a Fourier transform, enter the *.op* command **.FOUR 60hz 5 V(Vout)**. For these command, the arguments represent the fundamental frequency, the number of harmonics to be measured, and the voltage to be used, respectively. After the simulation is run, the harmonic distortion log file can be found in the same directory as the circuit file and it can be view it as a .txt. View it with WordPad and include it in your final report.

```
.meas Irms RMS I(Vs)
.meas S param Vrms*Irms
.meas Vrms RMS V(Vout)
.meas P AVG V(Vout)*I(R1)
.meas PF param P/S
.tran 1us 300ms 150ms
```

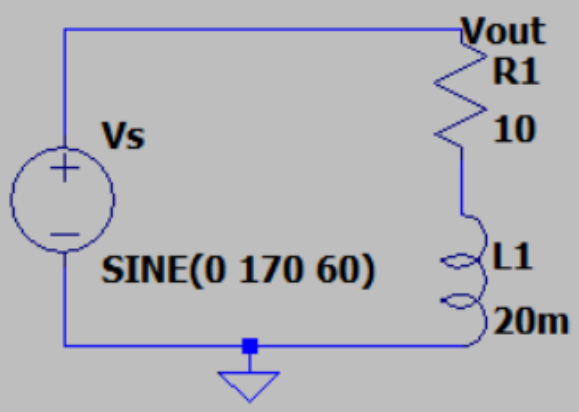


```
.OPTIONS plotwinsize=0
.OPTIONS numdgt=7
.FOUR 60hz 5 V(Vout)
```

```
Circuit: * C:\Users\dstbu\AppData\Local\LTspice\ecen164L3P3.asc

.OP point found by inspection.
N-Period=1
Fourier components of V(vout)
DC component:-0.000733761

Harmonic          Frequency          Fourier          Normalized
 Number             [Hz]            Component          Component
    1              6.000e+1          1.698e+2          1.000e+0
    2              1.200e+2          1.486e-3          8.749e-6
    3              1.800e+2          1.486e-3          8.751e-6
    4              2.400e+2          1.477e-3          8.699e-6
    5              3.000e+2          1.485e-3          8.746e-6
Partial Harmonic Distortion: 0.001747%
Total Harmonic Distortion:   0.042577%



p: AVG(v(vout)*i(r1))=915.93 FROM 0 TO 0.15
vrms: RMS(v(vout))=120.087 FROM 0 TO 0.15
s: vrms*irms=1147.48
pf: p/s=0.798208
irms: RMS(i(vs))=9.55544 FROM 0 TO 0.15


Date: Wed Jan 21 15:05:29 2026
Total elapsed time: 0.101 seconds.
```

Observations:

(1) What are the frequency components of the output?

We see the harmonic frequencies of n*60 for n=1,2,3…

This gives 60, 120, 180, 240, and 300Hz.

(2) What do you see in the output file? Where is most of the energy in the output signal?

I see the frequency components, their magnitudes, and the distortions along with all other previous measurements.

Section 3: Reduced inductance in load

In this section change the inductor value to 5 mH.

Redo the simulations and observations from **Section 1 and Section 2.**

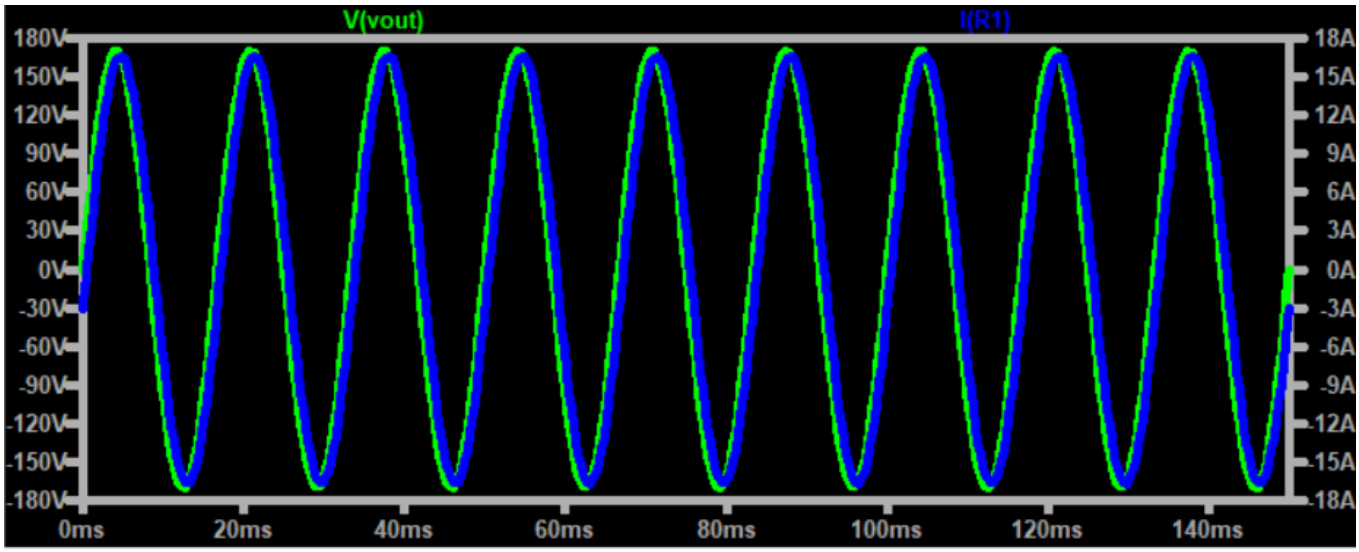


```
Circuit: * C:\Users\dstbu\AppData\Local\LTspice\ecen164L3P3.asc

.OP point found by inspection.
N-Period=1
Fourier components of V(vout)
DC component:-0.000733761

Harmonic          Frequency          Fourier          Normalized
 Number             [Hz]            Component          Component
    1              6.000e+1          1.698e+2          1.000e+0
    2              1.200e+2          1.486e-3          8.749e-6
    3              1.800e+2          1.486e-3          8.751e-6
    4              2.400e+2          1.477e-3          8.699e-6
    5              3.000e+2          1.485e-3          8.746e-6
Partial Harmonic Distortion: 0.001747%
Total Harmonic Distortion:   0.042577%



p: AVG(v(vout)*i(r1))=1388.16 FROM 0 TO 0.15
vrms: RMS(v(vout))=120.087 FROM 0 TO 0.15
s: vrms*irms=1412.65
pf: p/s=0.982664
irms: RMS(i(vs))=11.7636 FROM 0 TO 0.15


Date: Wed Jan 21 15:12:41 2026
Total elapsed time: 0.081 seconds.
```

Additional Observations:

(1) What is the effect of reduced inductance?

The PF is much higher as expected but the other fourier analysis components didn't change. We expect that because we don't mess with any frequency settings.

(2) Do the results improve? Explain your answer.

Considering we want our load to dissipate the power we produce, yes it improved.

Section 4: Adding capacitance to the load

In this section we will add a capacitor in parallel to the load.

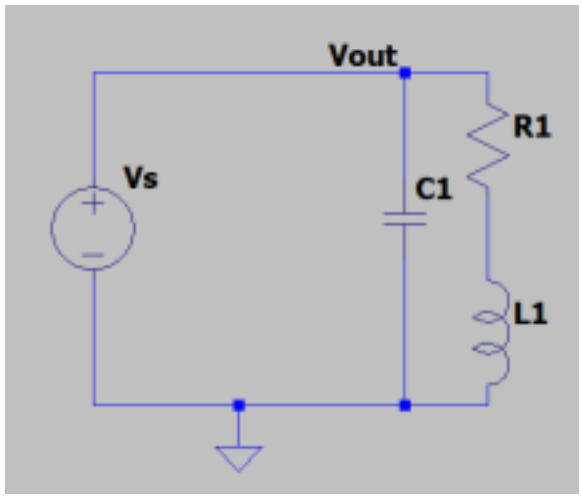

Figure 2: Resistive- Inductive Load with capacitance for power factor correction

(1) Figure 2 shows the schematic you should draw. Modify schematic of Figure 1 by adding the capacitor. Leave all the .measure and .op statements as you will be reusing them in this section.

(2) Set R1 = 10 ohms, L1 = 20 mH and C1 to have a value **{Cvalue}**

(3) Sweep the capacitance value by adding the statement shown below

.step param Cvalue 0 200u 5u

(4) Run the simulations

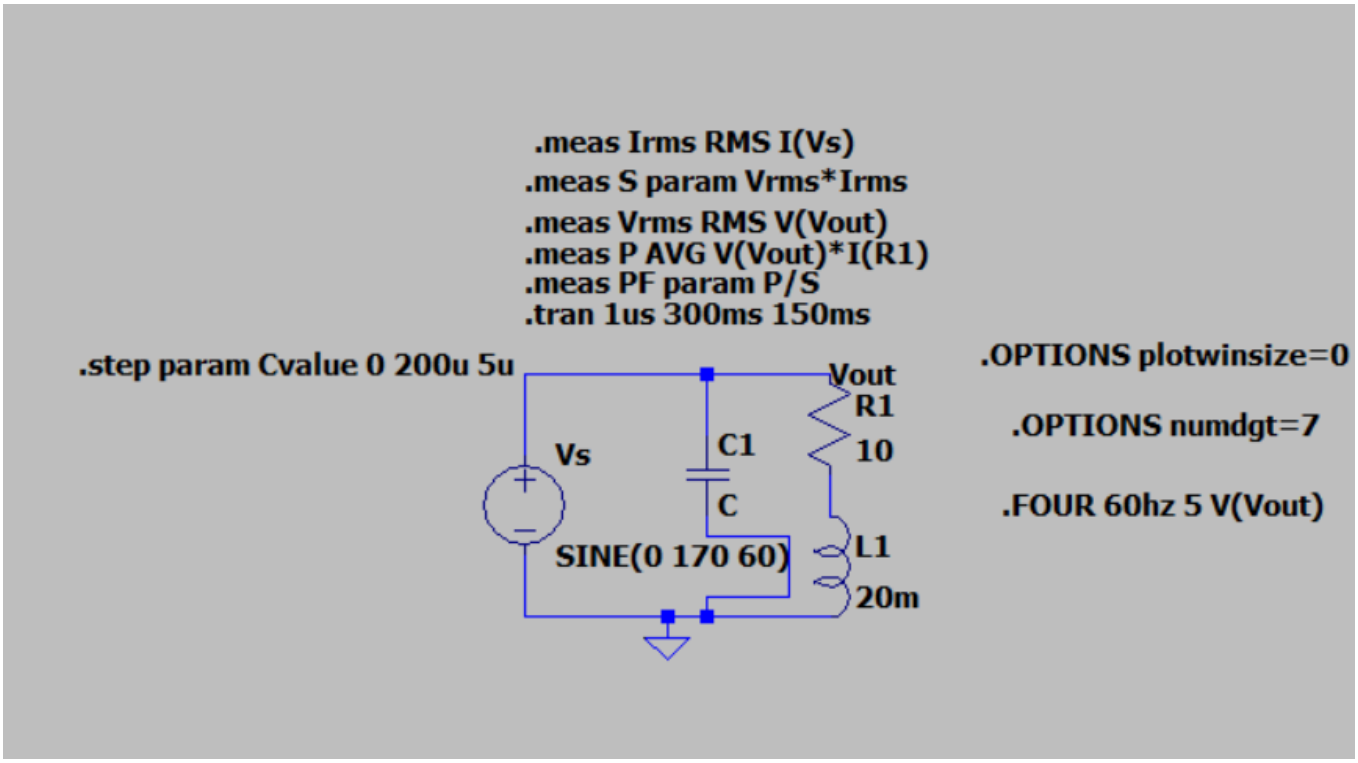
.meas Irms RMS I(Vs)
.meas S param Vrms*Irms
.meas Vrms RMS V(Vout)
.meas P AVG V(Vout)*I(R1)
.meas PF param P/S
.tran 1us 300ms 150ms
.step param Cvalue 0 200u 5u
.OPTIONS plotwinsize=0
.OPTIONS numdgt=7
.FOUR 60hz 5 V(Vout)
Vout
R1
10
Vs
C1
C
SINE(0 170 60)
L1
20m

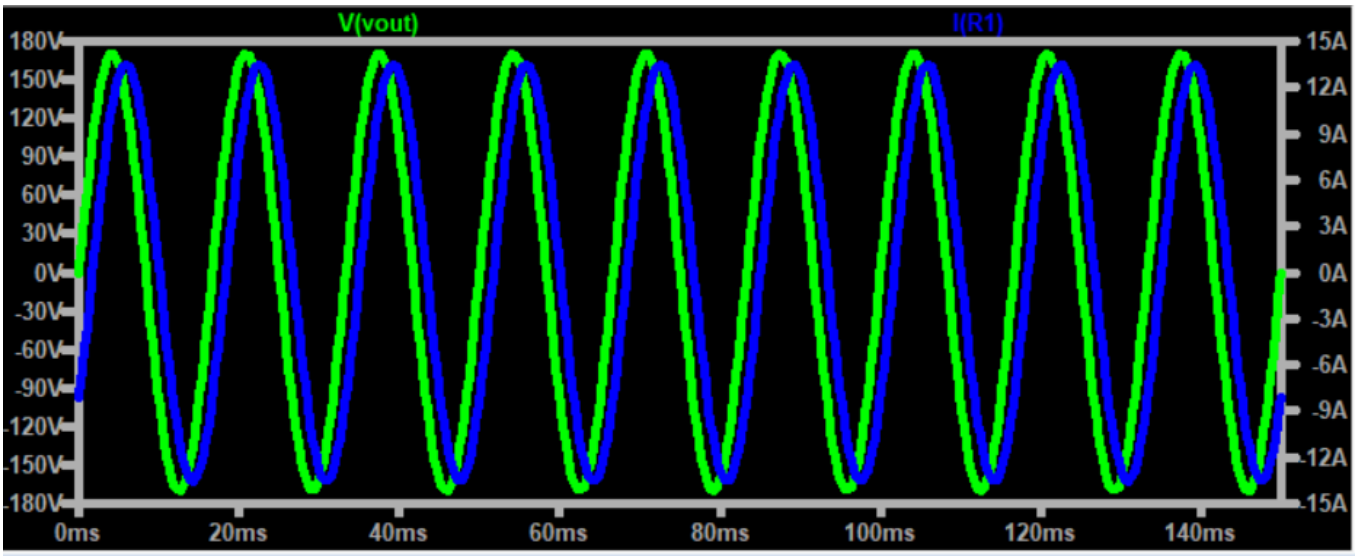
V(vout)
I(R1)
180V
150V
120V
90V
60V
30V
0V
-30V
-60V
-90V
-120V
-150V
-180V
15A
12A
9A
6A
3A
0A
-3A
-6A
-9A
-12A
-15A
0ms
20ms
40ms
60ms
80ms
100ms
120ms
140ms

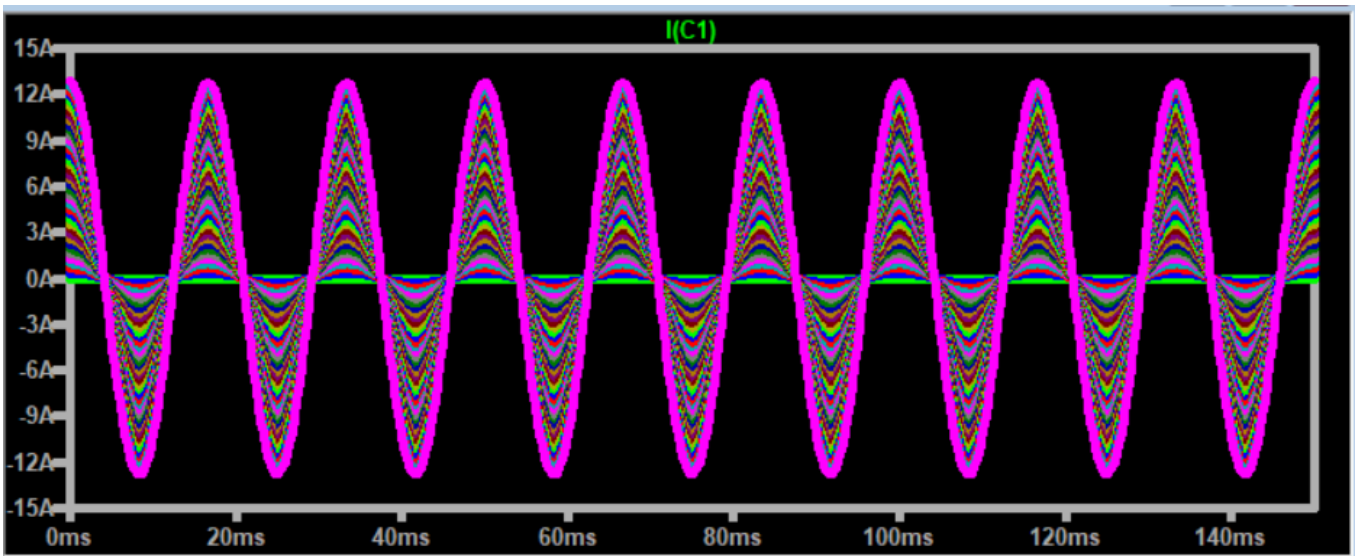

(5) Results of all the measure statements are in the log file. To access the log file: select schematic window and press CTRL-L. The log file will pop open in a new window.

(6) To plot the pf (power factor) as a function of capacitance;

a. right click in the log file window

b. select plot .step'ed

c. add trace pf

This will give you a plot of power factor vs. capacitance value.

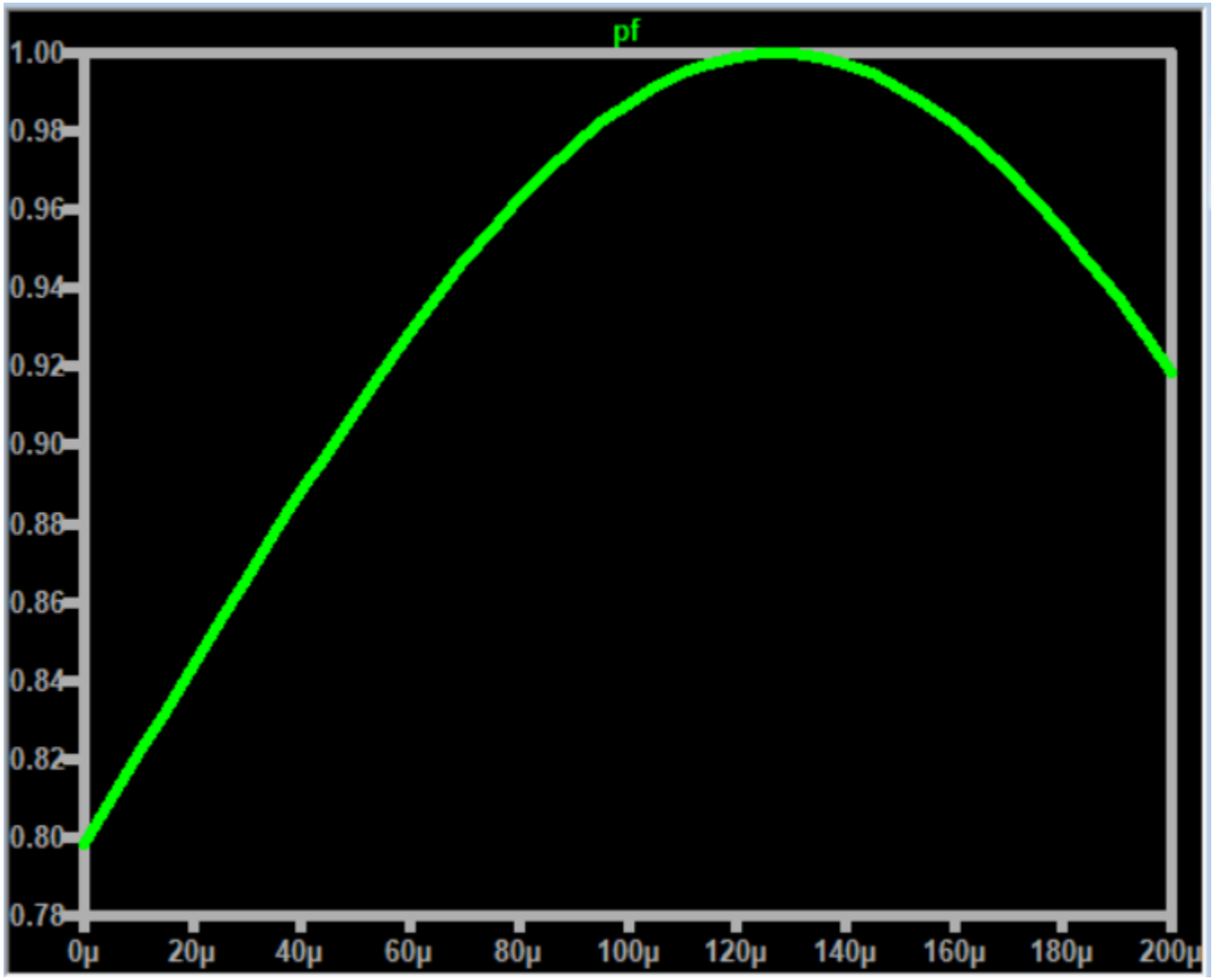

Observations:

(1) What is the pf for the capacitance at 0? Explain your answer.

The pf is what we had from the inductor + resistor load from earlier sections (~.798), which makes sense as 0 capacitance acts as no capacitor.

(2) Does increasing the capacitance help improve the power factor?

It does to a point. Capacitance has negative non-real component, and once the capacitance is big enough that jwl + 1/jwC = 0, then the pf is 1. Beyond that, it starts to decrease as the capacitance increases.

Part 2: Non-sinusoidal input to RL loads

Section 1: Power analysis

In this section we will analyzing the power in an RL load when a non-sinusoidal source is applied to it. For this section you will be representing the non-sinusoidal input as a sum of sinusoids as shown in the Figure 3.

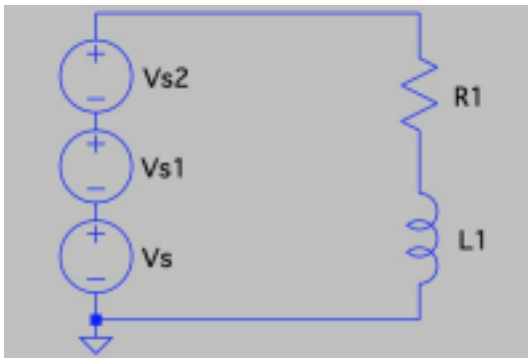

Figure 3: Resistive- Inductive Load with non-sinusoidal inputs

Simulations:

(1) In the figure the voltage source Vs is a DC source of 10V, Vs1 is a sinusoidal source with 1V amplitude and 60Hz frequency and 30 degrees phase and Vs2 is a sinusoidal source with 0.5V amplitude and 120Hz frequency and 45 degrees phase.

(2) Pick R1 = 10ohms and L1= 20 mH

(3) Run a Transient Analysis for 300ms, using 1us time step. But display the data after 150ms when the system has reached steady state.

(4) Plot voltage across the load (Vout) and current through the load.

(5) Enter the *.op* command

.FOUR 60hz 5 V(Vout)

.OPTIONS plotwinsize=0 and **.OPTIONS numdgt=7**.

The Fourier transform can be analyzed in the log file. Look at frequencies and see if there is any harmonic distortion.

There is.

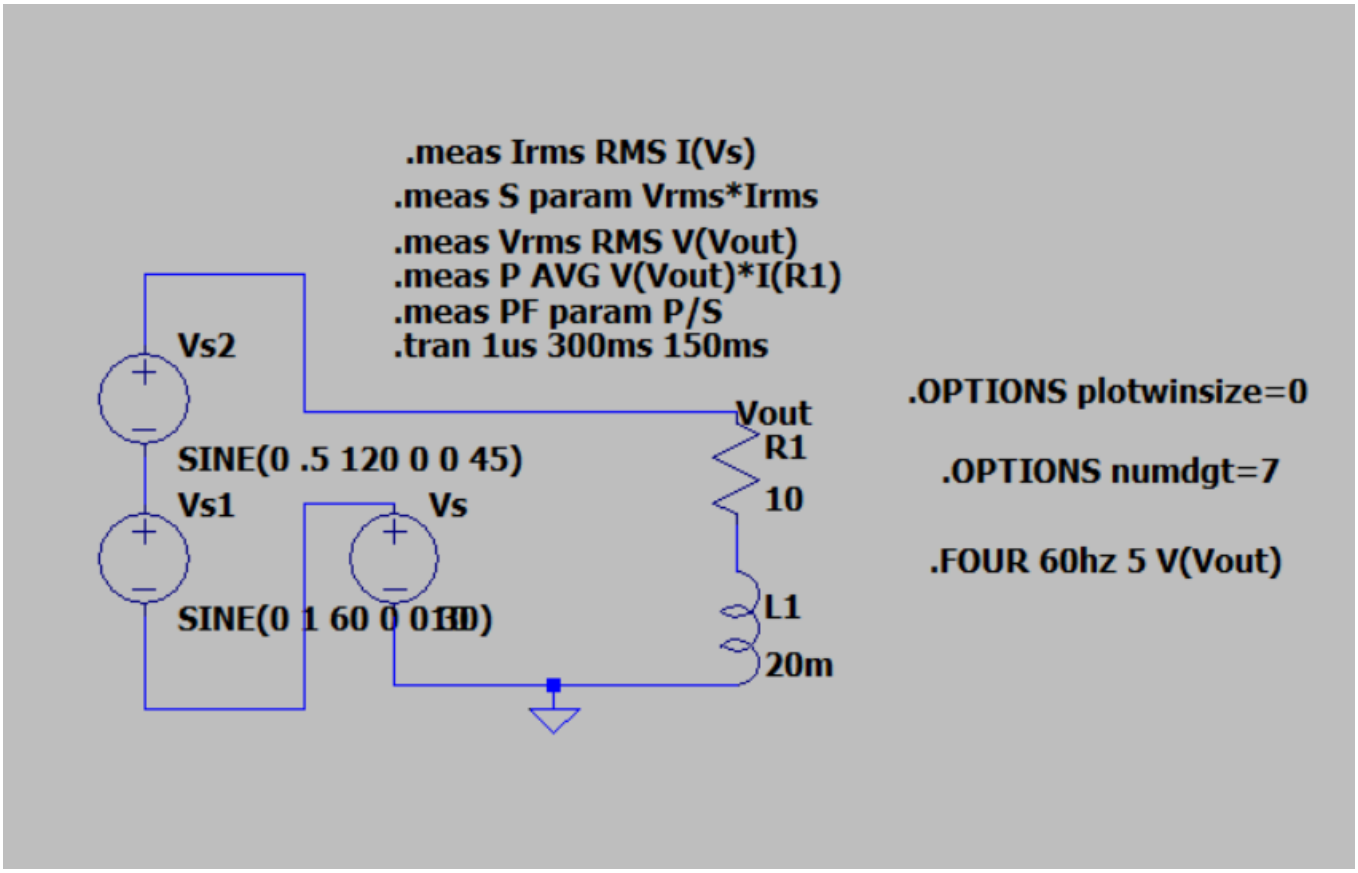
.meas Irms RMS I(Vs)
.meas S param Vrms*Irms
.meas Vrms RMS V(Vout)
.meas P AVG V(Vout)*I(R1)
.meas PF param P/S
.tran 1us 300ms 150ms
Vs2
SINE(0 .5 120 0 0 45)
Vs1
Vs
SINE(0 1 60 0 0 30)
Vout
R1
10
L1
20m
.OPTIONS plotwinsize=0
.OPTIONS numdgt=7
.FOUR 60hz 5 V(Vout)

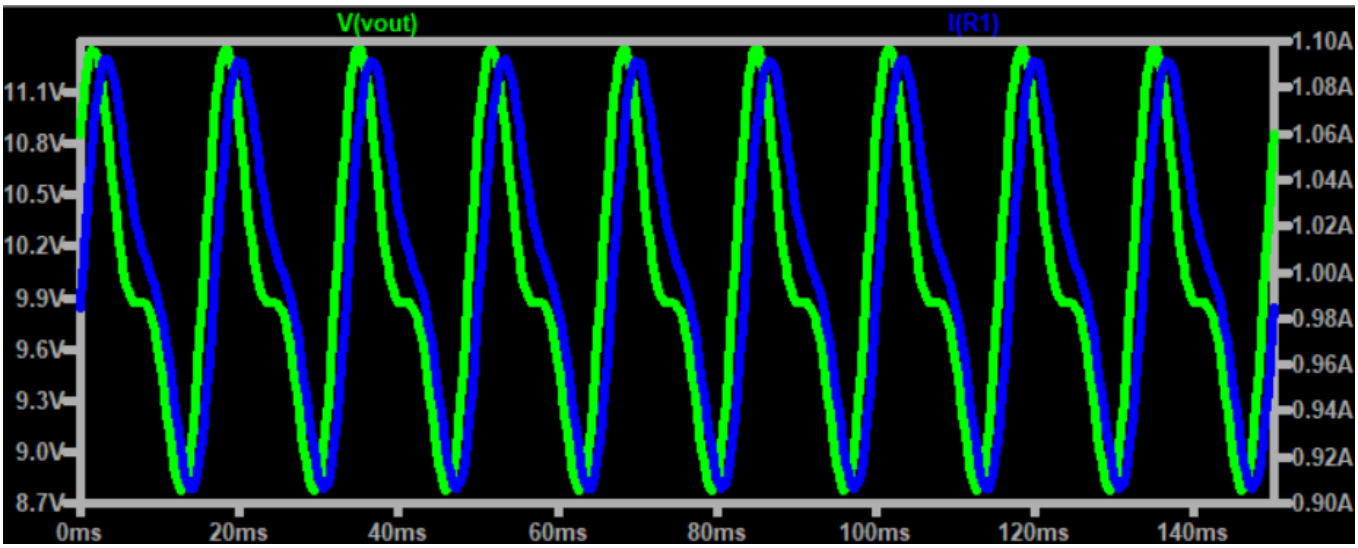
V(vout)
I(R1)
11.1V
10.8V
10.5V
10.2V
9.9V
9.6V
9.3V
9.0V
8.7V
1.10A
1.08A
1.06A
1.04A
1.02A
1.00A
0.98A
0.96A
0.94A
0.92A
0.90A
0ms
20ms
40ms
60ms
80ms
100ms
120ms
140ms

```
Circuit: * C:\Users\dstbu\AppData\Local\LTspice\ecen164L3P4.asc

Direct Newton iteration for .op point succeeded.
N-Period=1
Fourier components of V(vout)
DC component:10

Harmonic          Frequency          Fourier          Normalized
 Number             [Hz]            Component          Component
    1              6.000e+1          9.991e-1          1.000e+0
    2              1.200e+2          4.984e-1          4.989e-1
    3              1.800e+2          1.205e-4          1.206e-4
    4              2.400e+2          2.770e-5          2.773e-5
    5              3.000e+2          6.939e-5          6.945e-5
Partial Harmonic Distortion: 49.885184%
Total Harmonic Distortion:   49.885300%



p: AVG(v(vout)*i(r1))=10.0345 FROM 0 TO 0.15
vrms: RMS(v(vout))=10.0311 FROM 0 TO 0.15
s: vrms*irms=10.0478
pf: p/s=0.998671
irms: RMS(i(vs))=1.00167 FROM 0 TO 0.15


Date: Wed Jan 21 15:41:46 2026
Total elapsed time: 0.099 seconds.
```

Observations and Calculations:

(1) Using measure statements, find the average power.

.meas P AVG V(Vout)*I(R1)

AVG Power = 10.0345W

(2) What is the harmonic content of the output?

We see a harmonic distortion of 49.8853%

Additional Questions for Lab Report:

- Look back to Part 1 Section 4, when we did power factor correction.
- Is there an optimal value for the capacitance for this particular RL load to maximize power factor. Explain why or why not.

  Yes there is. Its around 135uF. This happens because capacitance is a negative nonreal impedance while inductance is positive nonreal impedance. Power is only based on real impedance, so if the negative non-real can fully cancel out the positive non-real, then we are only left with real impedance and thus match P to S 1:1.
- Will this have to be recalculated if the load changes? Explain your answer.

Only if the inductance in the load changes as that's what determines the reactance.

BONUS:

Put that optimal capacitance value in your Figure 2 schematic and redo Section 1.

Equation:

C = L/(R^2 + w^2 * L^2)

Solved C = 127.511uF

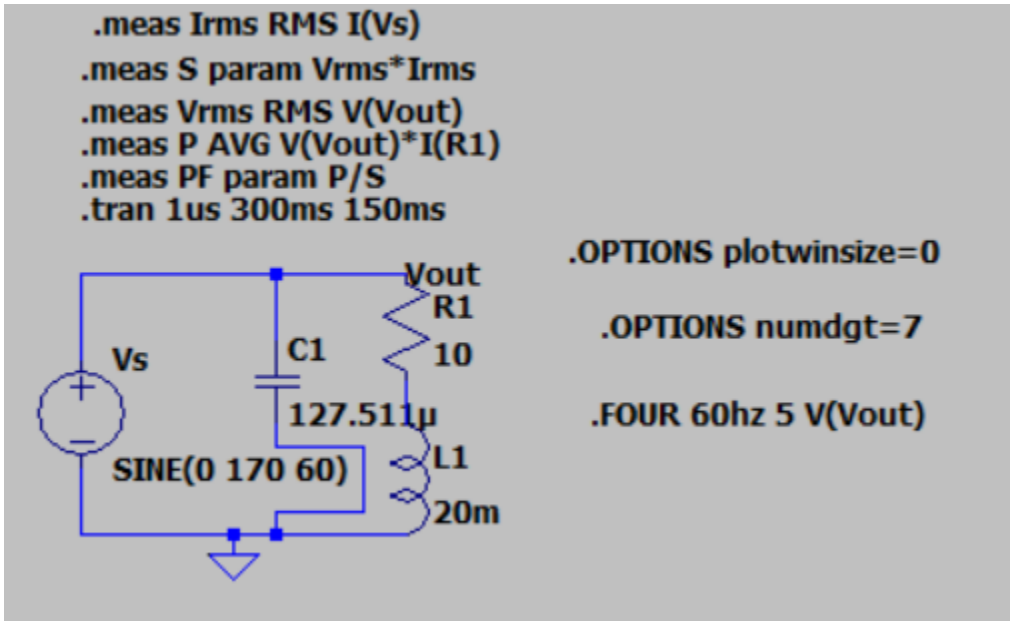

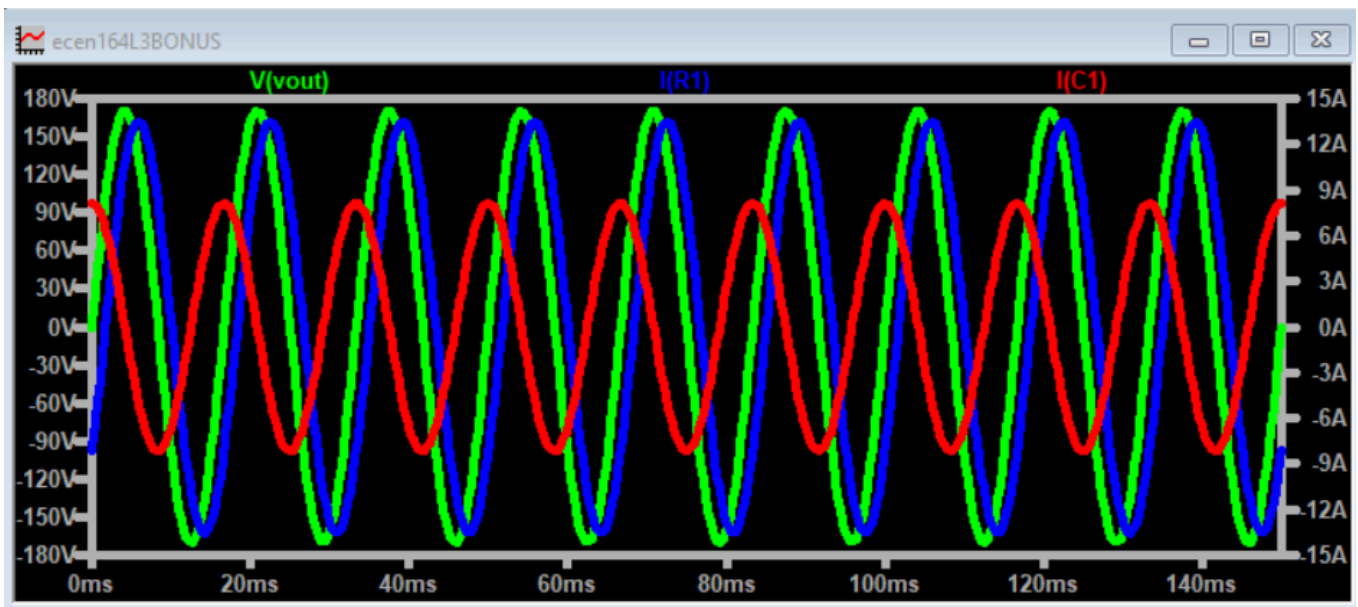

```
Circuit: * C:\Users\dstbu\AppData\Local\LTspice\ecen164L3BONUS.asc

.OP point found by inspection.
N-Period=1
Fourier components of V(vout)
DC component:-0.000733761

Harmonic          Frequency          Fourier          Normalized
 Number             [Hz]            Component          Component
    1              6.000e+1          1.698e+2          1.000e+0
    2              1.200e+2          1.486e-3          8.749e-6
    3              1.800e+2          1.486e-3          8.751e-6
    4              2.400e+2          1.477e-3          8.699e-6
    5              3.000e+2          1.485e-3          8.746e-6
Partial Harmonic Distortion: 0.001747%
Total Harmonic Distortion:   0.042577%



p: AVG(v(vout)*i(r1))=915.93 FROM 0 TO 0.15
vrms: RMS(v(vout))=120.087 FROM 0 TO 0.15
s: vrms*irms=915.931
pf: p/s=0.999999
irms: RMS(i(vs))=7.62724 FROM 0 TO 0.15


Date: Wed Jan 21 16:19:57 2026
Total elapsed time: 0.202 seconds.
```

● What do you observe as the phase difference between the voltage across the entire load and the current to the entire load from the source?
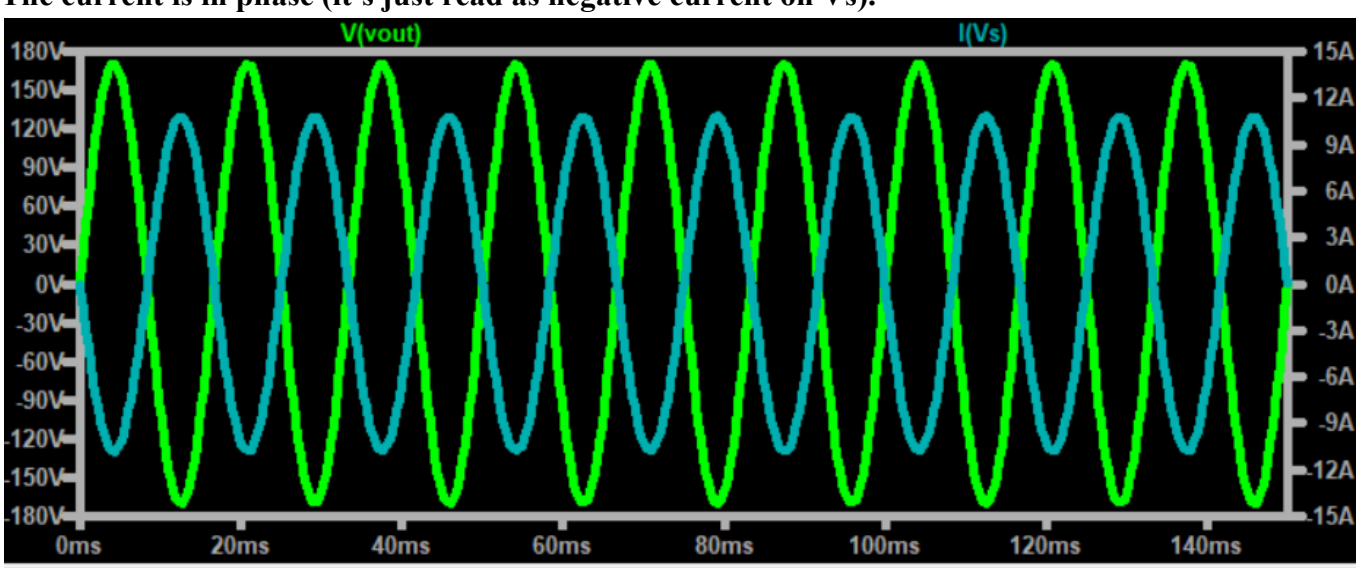
The current is in phase (it's just read as negative current on Vs).